REMOVAL

1. DISCONNECT BATTERY NEGATIVE TERMINAL

2. REMOVE REAR SEAT CUSHION ASSEMBLY RH

(a) Remove the 2 installing bolts of the rear seat cushion.

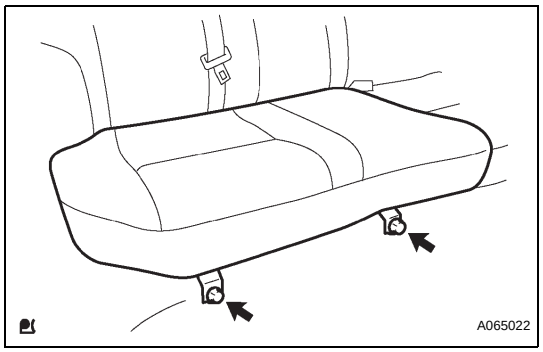

3. REMOVE REAR FLOOR SERVICE HOLE COVER

(a) Remove the 4 screws, then remove the rear floor service hole cover (A).

(b) Disconnect the fuel pump connector (B).

(c) Discharge the fuel system pressure (C).

(1) Connect the battery negative terminal.
Torque: 5.4 N*m (55 kgf*cm, 48 in.*lbf)

(2) Start the engine.

(3) Turn the ignition switch off after the engine stops.
HINT:
DTC P0171 (system to lean) may be present.

(4) Crank the engine again, and check that the engine does not start.

(5) Remove the fuel tank cap, and discharge the pressure remaining in the fuel tank completely.

(6) Disconnect the battery negative terminal.

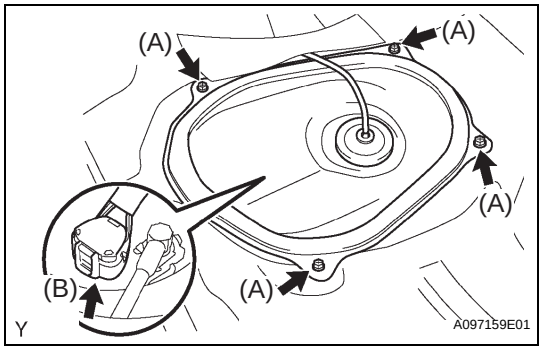

4. REMOVE FUEL SUCTION WITH PUMP AND GAUGE TUBE ASSEMBLY

(a) Disconnect the fuel tank main tube.

(1) Remove the tube joint clip, then pull the fuel tube joint out of the plug of the fuel suction plate.
NOTICE:
- **Check that there is no dirt or other foreign objects around the fuel tube joint before disconnecting it. Clean the joint if necessary.**
- **It is necessary to prevent mud or dirt from entering the joint. If mud or dirt gets in the joint, the O-rings may not seal properly.**
- **Only disconnect the joint by hand.**
- **Do not bend, kink or twist the nylon tubes.**
- **Protect the joint by covering it with a plastic bag.**

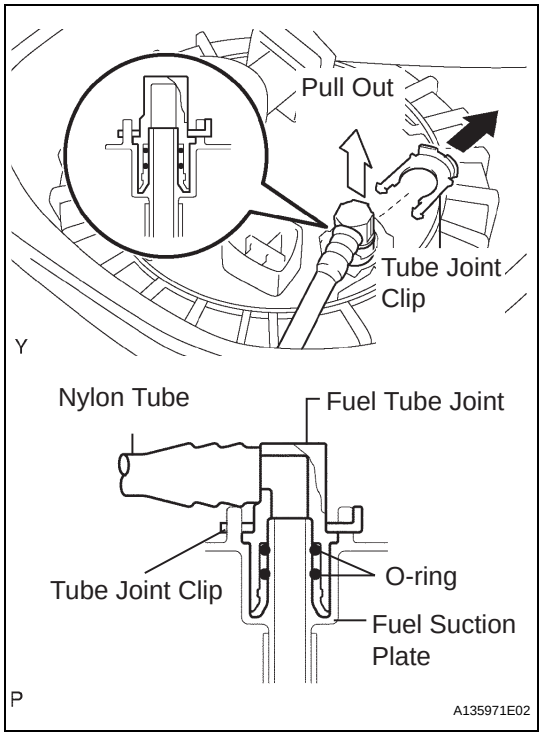

FU

cardiagn.com

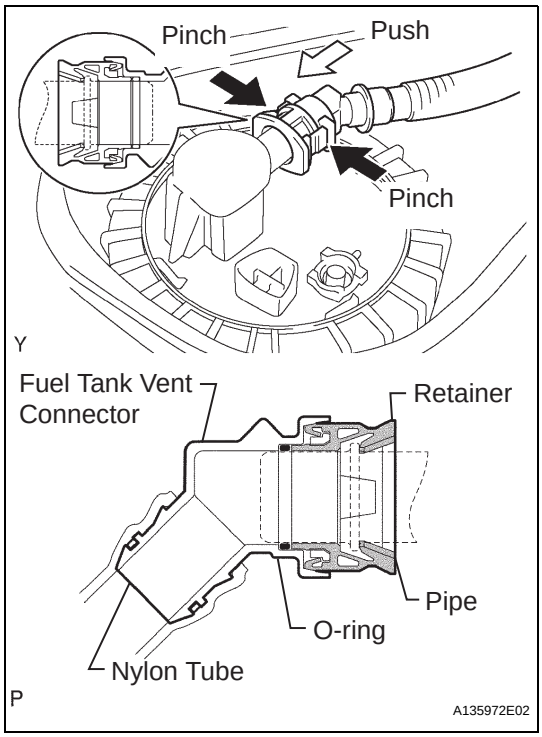

(b) Disconnect the fuel tank vent hose.
   (1) Pinch the retainer and pull the fuel tank vent connector out of the fuel tank to disconnect the fuel tank vent hose from the fuel suction plate.
   NOTICE:
   - **Check that there is no dirt or other foreign objects around the connector before disconnecting it. Clean the connector if necessary.**
   - **It is necessary to prevent mud or dirt from entering the connector. If mud or dirt gets in the connector, the O-rings may not seal properly.**
   - **Only disconnect the quick connector by hand.**
   - **Do not bend, kink or twist the nylon tubes.**
   - **Protect the connector by covering it with a plastic bag.**
   - **If the pipe and connector are stuck, carefully try wiggling or pushing and pulling on the connector to release it. Pull the connector off the pipe carefully.**

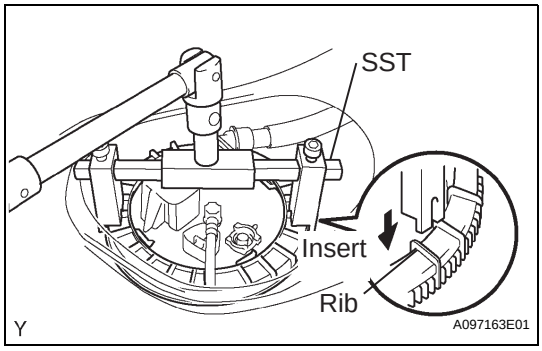

(c) Using SST, loosen the fuel pump gauge retainer.
   SST 09808-14020 (09808-01410, 09808-01420, 09808-01430)
   NOTICE:
   Using SST. Do not use any other tools such as a screwdriver.
   HINT:
   Insert the notch of SST into the rib of the fuel pump gauge retainer.

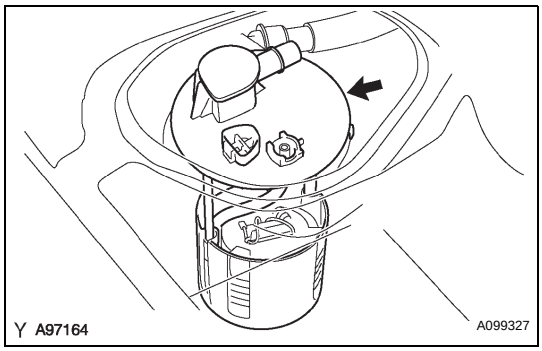

(d) Remove the fuel pump gauge retainer while holding the fuel suction tube by hand.

(e) Remove the fuel suction tube from the fuel tank.
   NOTICE:
   Make sure that the fuel sender gauge arm does not bend.

cardiagn.com

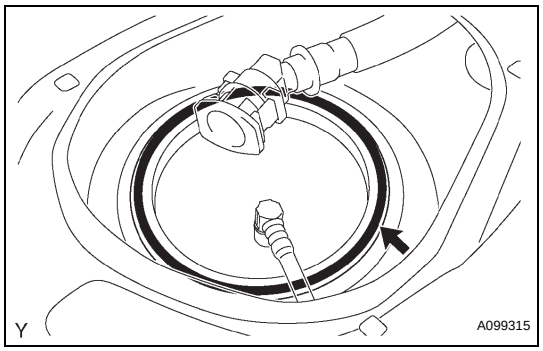

(f) Remove the gasket from the fuel tank.

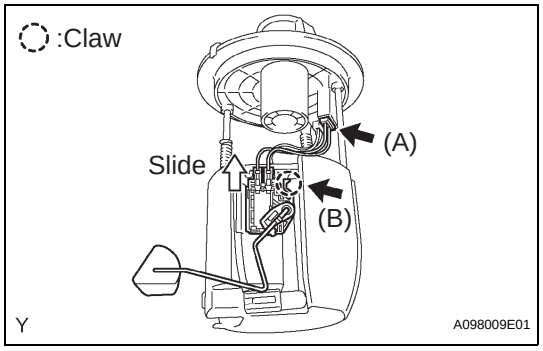

5. REMOVE FUEL SENDER GAUGE ASSEMBLY

(a) Disconnect the fuel sender gauge connector (A).

(b) Release the claw. Then slide the fuel sender gauge to remove it from the fuel filter (B).

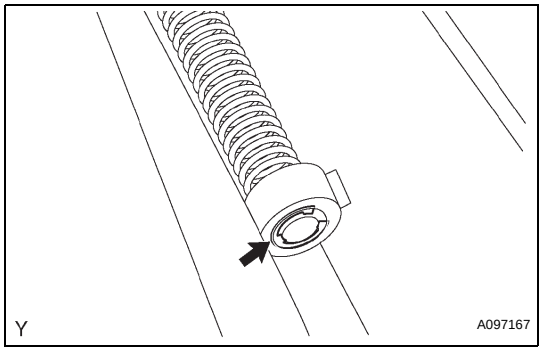

6. REMOVE FUEL SUCTION PLATE SUB-ASSEMBLY

(a) Remove the E-ring.

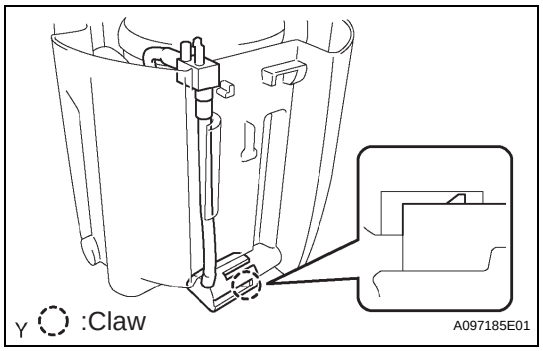

(b) Release the claw, then remove the fuel pump filter.

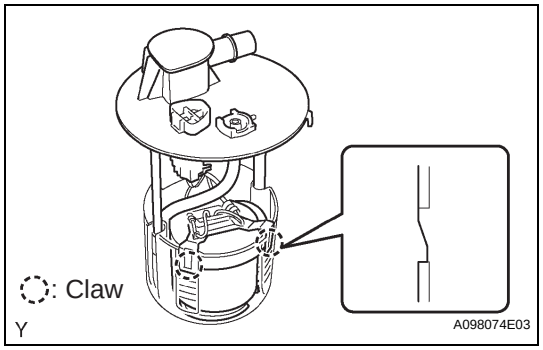

(c) Release the 2 claws, then remove the fuel suction plate and spring.

FU

cardiagn.com

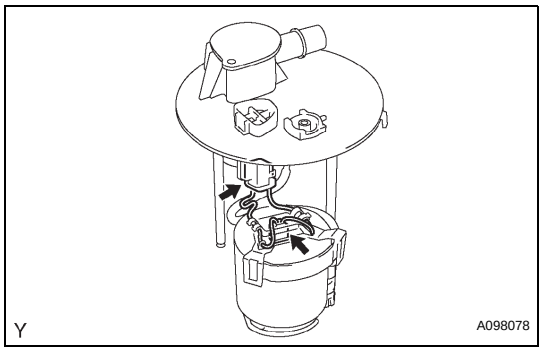

7. REMOVE FUEL PUMP HARNESS

(a) Disconnect the 2 fuel pump harness connectors.

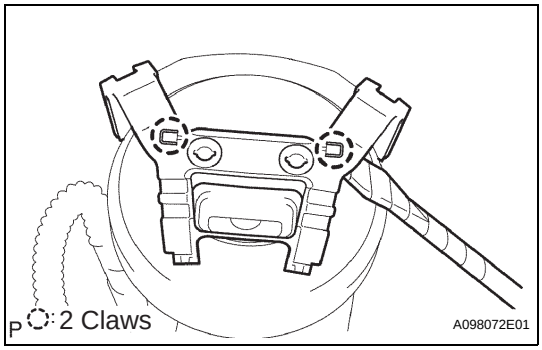

8. REMOVE NO. 1 FUEL SUCTION SUPPORT

(a) Using a screwdriver with its tip wrapped with tape, release the 2 claws. Then remove the No. 1 fuel suction support.

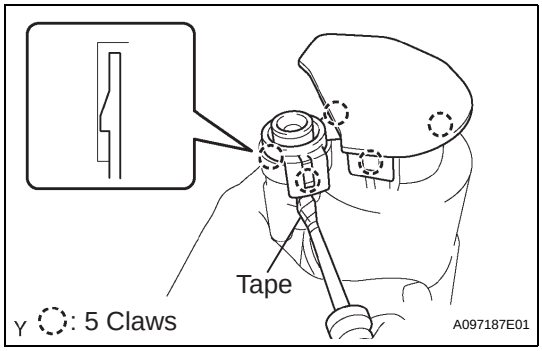

9. REMOVE FUEL PUMP FILTER

(a) Using a screwdriver with its tip wrapped with tape, release the 5 claws. Then remove the fuel pump filter.

NOTICE:

Do not damage the fuel pump filter or fuel filter.

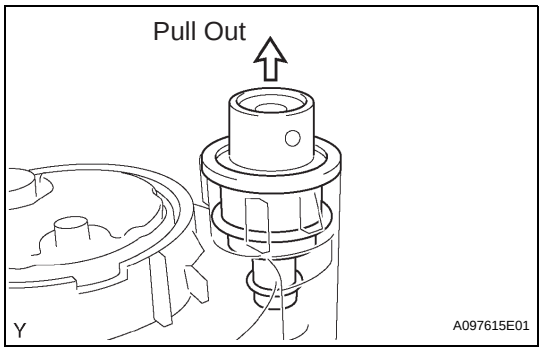

10. REMOVE FUEL PRESSURE REGULATOR ASSEMBLY

(a) Pull the fuel pressure regulator out of the fuel filter.

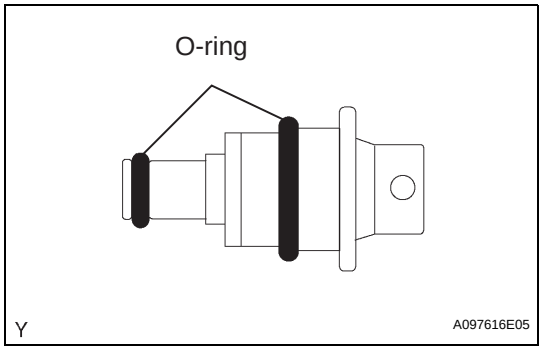

(b) Remove the 2 O-rings from the fuel pressure regulator.

cardiagn.com